ANALYTICAL CUMULATIVE EXAMINATION

October 6, 1990

Electrochemical oxidation of 5,6-diaminouracil serves as a good model for certain purine electrooxidations. The detailed mechanism outlined for 5,6-diaminouracil is shown below and is very similar to that proposed for uric acid and has been employed to support the uric acid reaction scheme.

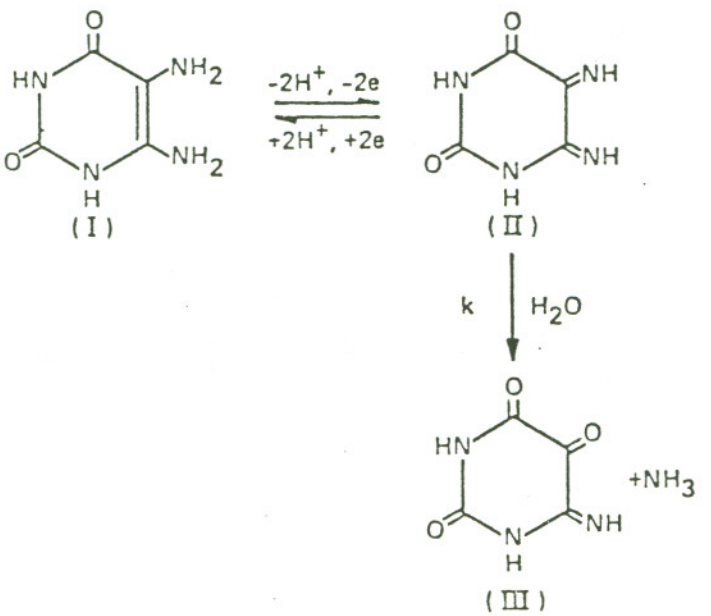

Formation of intermediate diimine species (II) appears to be of great fundamental importance in many biological redox processes including the enzymatic oxidation of purines. Thin layer spectroelectrochemistry on the diimine species (II) was performed in order to determine the mechanistic fate of this intermediate.

5 mM 5,6-diaminouracil in an appropriate electrolyte solution was placed in an optically transparent thin layer electrode (OTTLE). This type of cell, diagrammed below, consists of a gold minigrid (screen) sandwiched between two microscope slides and sealed around the edges. Solution is allowed to enter the thin region between the microscope slides by capillary action. A potentiostat is used to place a predetermined potential between the minigrid electrode and the solution and light is passed through the minigrid and the surrounding solution. (See next page for Fig. 1.)

The following experiment was performed. A potential step of 0.6 volts was applied to the minigrid electrode for a period of 150 seconds. After that time the potential was removed from the cell (potentiostat disconnected, open circuit). The absorbance of 320 nm light was monitored during the course of the experiment. The data is shown in the graphs on the next page.

It is known that at a potential of 0.6 volts vs. the SCE the 5,6-diaminouracil is exclusively converted electrochemically to the intermediate diimine species (II), at a rate limited by the rate of diffusion of 5,6-diaminouracil to the minigrid electrode. The diimine intermediate (II) is also known to absorb 320 nm light which passes through the minigrid and the surrounding solution.

CONTINUED....

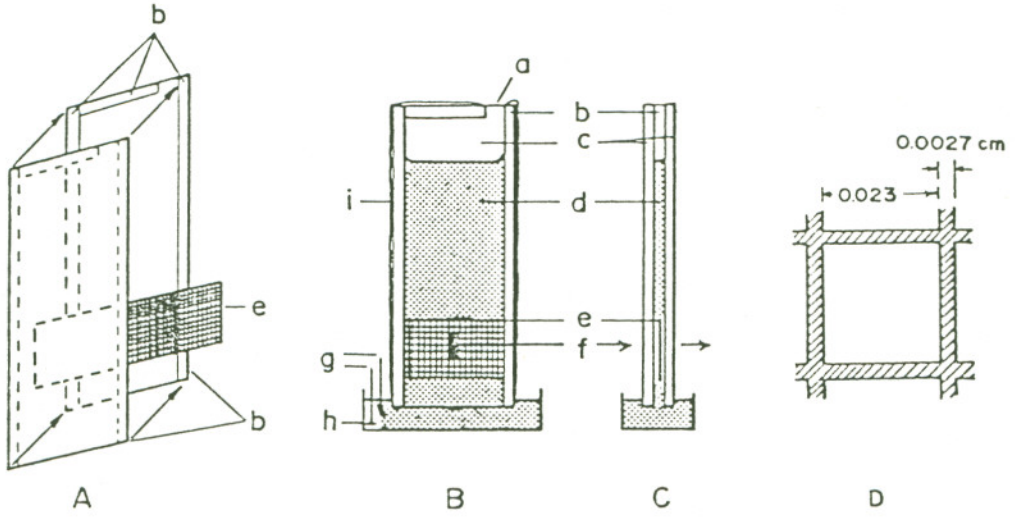

Figure 1. Optically transparent thin layer electrode. (*A*) Assembly of the cell. (*B*) Front view. (*C*) Side view. (*D*) Dimensions of 100 wires/in. gold minigrid. (*a*) Point of suction application to change solution, (*b*) Teflon tape spacers, (*c*) microscope slides (1 × 3 in.), (*d*) solution, (*e*) transparent gold minigrid electrode, (*f*) optical path of spectrometer, (*g*) reference and auxiliary electrodes, (*h*) solution cup, and (*i*) epoxy holding cell together.

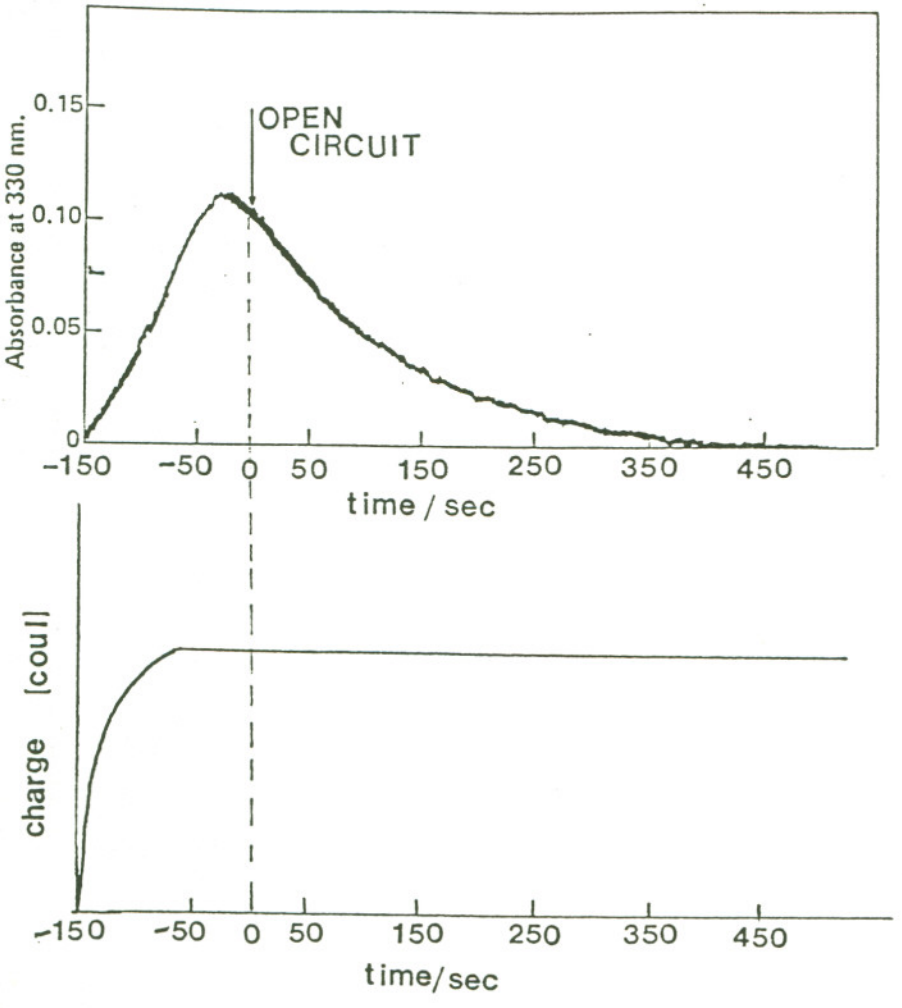

CONTINUED...

QUESTIONS:

1. (10 points) What is responsible for the increase in absorption of 320 nm light during the initial stages of the experiment?

2. (10 points) Why does the absorption peak?

3. (40 points) From the data for absorption calculate a pseudo first order rate constant for k, relating to the homogeneous reaction of the diimine intermediate. You may assume that the absorbance of the solution at infinite time is zero.

4. (10 points) How does the rate of diffusion of 5,6-diaminouracil compare to the rate of reaction of the diimine intermediate.

5. (20 points) Predict what would happen to k if the pH of the electrolyte solution was increased.

6. (10 points) During the time that the solution was undergoing electrolysis, what would the total charge that passed through the cell be an indication of? Why does the charge stop increasing before the potentiostat is disconnected?